Proceedings of the 7th International Conference on Inventive Material Science and Applications (ICIMA-2025)
IEEE Xplore Part Number: CFP254B2-ART; ISBN: 979-8-3315-2151-6

2025 7th International Conference on Inventive Material Science and Applications (ICIMA) | 979-8-3315-2151-6/25/$31.00 ©2025 IEEE | DOI: 10.1109/ICIMA64861.2025.11074003

A Real-Time IoT and Machine Learning-based Smart Insole System for Early Detection and Prevention of Diabetic Foot Ulcers

Rakshita R
Department of Computer Sceince
and Engineering (AI&ML)
Dayananda Sagar University
Bangalore, India.
rakshita.r-aiml@dsu.edu.in

Lakshmanan M
Department of Computer Sceince
and Engineering (AI&ML)
Dayananda Sagar University
Bangalore, India.
lakshmanan1909@gmail.com

Challa Jaya Karthik
Department of Computer Sceince
and Engineering (AI&ML)
Dayananda Sagar University
Bangalore, India
eng21am0021@dsu.edu.in

Chintakayala Yogeswara Sai
Department of Computer Sceince
and Engineering (AI&ML)
Dayananda Sagar University
Bangalore, India
eng21am0025@dsu.edu.in

Kolisetty Dhanush
Department of Computer Sceince
and Engineering (AI&ML)
Dayananda Sagar University
Bangalore, India
eng21am0058@dsu.edu.in

Matam Mahesh
Department of Computer Sceince
and Engineering (AI&ML)
Dayananda Sagar University
Bangalore, India
eng21am0070@dsu.edu.in

***Abstract*— Diabetic Foot Ulcers (DFUs) are a severe and common complication of diabetes, affecting up to 50% of long-term patients and often leading to hospitalization or amputation. Existing monitoring methods lack affordability, scalability and real-time responsiveness. This study addresses the critical need for early detection and prevention of DFUs by developing a real-time, cost-effective smart insole system that leverages IoT and machine learning. The proposed system continuously monitors foot pressure using embedded Flexi-Force sensors and transmits data to a mobile application via a cloud-based platform. Advanced machine learning models, including K-Nearest Neighbors and Random Forest classifiers, analyze the data to predict early signs of ulceration. The system achieved a test accuracy of 99.997% in detecting abnormal pressure patterns, demonstrating its efficacy in identifying high-risk conditions before ulceration occurs. This work contributes a practical, lightweight, and reliable solution to diabetic foot care, improving patient outcomes through timely intervention.**

Keywords*— *Diabetic Foot Ulcer, Foot Pressure Monitoring, Sustainable Development Goal 3 (SDG 3): Good Health and Well-Being.

I. Introduction

Diabetes mellitus is a chronic metabolic disorder characterized by persistent hyperglycemia resulting from defects in insulin secretion, insulin action, or both. One of the most serious and prevalent complications associated with diabetes is the Diabetic Foot Ulcer (DFU) [9]. This condition arises primarily due to prolonged poor glycemic control, leading to vascular and neurological impairments. Globally, more than 50 million individuals are affected by diabetes, with the highest prevalence observed among individuals aged between 45 and 65 years. Diabetic foot ulcers are particularly dangerous because they often develop unnoticed. This is largely due to peripheral neuropathy, a condition wherein the sensory nerves are damaged, causing a loss of sensation in the lower extremities. Consequently, patients may fail to detect minor injuries, blisters, or pressure points, allowing these wounds to worsen over time. Continuous pressure, particularly over critical areas of the foot, leads to microtrauma, tissue damage, and eventually ulceration. In some cases, these wounds become infected, progressing to gangrene and necessitating amputation if not promptly treated.

Peripheral neuropathy in diabetic patients predominantly affects the sensory nerves, diminishing the ability to perceive pain and temperature. However, in advanced cases, motor nerves may also be impacted, leading to muscle weakness and structural deformities in the foot, further increasing the risk of injury [16]. The healing process is further hampered by poor blood circulation, often resulting from arterial narrowing or vascular constriction caused by chronic hyperglycemia. This vascular insufficiency compromises the body's ability to deliver essential nutrients and oxygen to the affected tissues, delaying wound healing and increasing the susceptibility to infections. Moreover, elevated blood glucose levels impair immune function and skin regeneration, further contributing to the formation and persistence of non-healing foot ulcers [10]. Individuals with Type 2 diabetes are particularly prone to these complications due to their increased vulnerability to infections and reduced wound healing capacity. If left untreated, these ulcers can evolve into chronic wounds, leading to severe complications such as deep tissue infections, osteomyelitis, and lower limb amputations.

The psychosocial and economic burdens associated with diabetic foot ulcers are substantial. Affected individuals often experience a significant decline in mobility, limiting their independence and daily functioning. This reduced quality of life can lead to depression, anxiety, and social isolation [14]. Additionally, the financial strain caused by frequent medical consultations, advanced wound care, hospitalizations, and potential surgical interventions places a heavy burden on patients and healthcare systems alike. Given the severe consequences associated with diabetic foot ulcers, there is a critical need for early detection, continuous

Authorized licensed use limited to: Malta College of ArtsScience&Tech. Downloaded on November 24,2025 at 11:37:56 UTC from IEEE Xplore. Restrictions apply.

monitoring, and effective management of foot health in diabetic individuals [15]. Raising awareness about proper foot hygiene, the importance of glycemic control, and the availability of preventive technologies is essential to mitigating the risks of ulceration and improving long-term patient outcomes.

II. RELATED WORK

Studies have explored the use of force-sensing resistors, like Flexi Force sensors, to monitor foot pressure and identify high-risk areas prone to ulceration. Machine learning models, including Random Forest and Support Vector Machines, have demonstrated efficacy in analyzing foot pressure data for early detection. Additionally, IoT frameworks have facilitated remote monitoring and real-time alerts through cloud integration. However, existing approaches face challenges such as high costs, limited scalability, and a lack of diverse datasets for model validation. These gaps highlight the need for an affordable, efficient, and user-friendly system that integrates advanced hardware and AI technologies for early diagnosis and prevention. The Internet of Medical Things (IoMT) has transformed home-based, patient-centered diabetic foot care by promoting patient involvement, personalized care, and effective chronic disease management. By utilizing data-driven treatment plans, telecommunication, and real-time monitoring, IoMT enhances both the quality and accessibility of care. It brings together multiple disciplines, including podiatry, engineering, and data security. However, one of the main challenges is the need to effectively merge consumer electronics with medical-grade devices, ensuring both functionality and regulatory compliance [1].

The analysis of foot plantar pressure distribution has become increasingly significant in modern healthcare, especially for diabetic patients who are highly susceptible to foot ulcers. In individuals with poorly controlled diabetes, skin tissue can deteriorate over time, resulting in severe complications such as infection or amputation. The study by proposes an IoT-based approach to monitor plantar pressure for early detection of potential ulceration. Early identification enables timely treatment, thereby reducing the risk of further complications. The system leverages IoT technology to collect and transmit real-time data, enhancing patient monitoring and enabling proactive healthcare. One of the primary benefits of this approach is its potential to significantly improve patient outcomes by detecting issues before they become critical. However, the implementation also raises concerns regarding data privacy and security, as sensitive health information is transmitted over networks. Ensuring secure communication protocols and compliance with medical data regulations is crucial. The research highlights the promise of IoT in diabetic foot care, while also pointing to the need for robust data protection strategies [2].

The early detection of diabetic foot ulcers is essential due to the high susceptibility of diabetic patients to complications arising from poor blood circulation, sensory loss, and delayed wound healing. In individuals with uncontrolled diabetes, skin tissue gradually deteriorates, increasing the risk of severe infections and possible amputations. Given the global rise in diabetes cases driven by sedentary lifestyles and dietary habits, the need for proactive and preventive healthcare strategies has intensified. In this research, proposed an IoT-based system aimed at assessing foot hardness across various pressure points to facilitate early diagnosis. The system employs components such as temperature sensors and Arduino Uno to gather and process real-time data from the patient's foot. By monitoring these physiological parameters, the system can detect early signs of ulceration and enable timely medical intervention. This approach is particularly valuable in preventing complications that adversely affect patients' quality of life. The integration of IoT into diabetic foot care supports continuous monitoring, which is critical for chronic condition management. The model shows promise in reducing the incidence of advanced ulcers, thus lowering the burden on healthcare systems. However, one of the notable limitations is the cost associated with the computational resources required for real-time processing and system deployment. Despite this challenge, the research demonstrates the effectiveness of smart technologies in enhancing diabetic care and presents a foundation for further development of affordable, scalable solutions [3].

The project proposed a novel non-invasive photonics-based device designed for the monitoring and management of Diabetic Foot Ulcers (DFUs), which are among the most severe complications associated with diabetes. DFUs often lead to significant disabilities, including foot amputation, and in extreme cases, can result in mortality. Unlike conventional diagnostic methods that rely on invasive procedures such as biopsies, this device utilizes advanced technologies like hyperspectral imaging (HSI) and thermal imaging to assess the condition of foot ulcers. The system is capable of evaluating critical biomarkers, including oxyhemoglobin (HbO2) and deoxyhemoglobin (Hb), which are essential for determining peripheral oxygen saturation (SpO2) and tissue oxygen saturation (StO2). By providing insights into these biomarkers, the device supports both patients and healthcare professionals in understanding the progression and severity of DFUs. The non-invasive nature of the device enhances patient comfort and compliance, while also enabling continuous and real-time ulcer monitoring. This approach has the potential to improve early diagnosis, personalize treatment plans, and reduce the risk of complications. However, despite its technical advantages and clinical relevance, the system's effectiveness must be validated on a larger scale to ensure reliability and generalizability across diverse patient populations. The need for large-scale validation presents a challenge for widespread deployment, but the foundational innovation holds promise for advancing diabetic foot care through photonic sensing technologies [4].

Diabetic Foot Ulcers (DFUs) are among the most common and severe complications of diabetes, often involving infection and ischemia that require accurate detection for effective diagnosis and treatment planning. Recent advancements in deep learning have significantly improved the automated classification of DFUs, particularly through the use of convolutional neural networks (CNNs), which are capable of extracting meaningful features from medical images. These features are further analyzed using fully connected networks to determine class probabilities related to ulcer conditions. The proposed method enhances traditional image classification approaches by integrating global class knowledge, rather than relying solely on single-image inputs and pre-trained network parameters. Experimental results indicate that this approach substantially improves the performance of infection and ischemia classification in DFUs, offering valuable support for clinical decision-making. However, a notable limitation is its current

Authorized licensed use limited to: Malta College of ArtsScience&Tech. Downloaded on November 24,2025 at 11:37:56 UTC from IEEE Xplore. Restrictions apply.

inability to effectively support incremental learning, which is essential for adapting to dynamic and expanding clinical datasets. Despite this challenge, the method presents a promising step forward in the development of intelligent diagnostic systems for diabetic foot care using deep learning techniques [5].

Diabetic foot syndrome is a multifactorial medical condition that arises from complications such as peripheral neuropathy, peripheral arterial disease, and infections, making it one of the most challenging consequences of diabetes in terms of patient quality of life. Its gradual and often asymptomatic onset makes early detection difficult, leading to severe complications if left unmanaged. In response to this challenge, recent research has explored the integration of Artificial Intelligence (AI) methodologies with screening, diagnosis, and care technologies for diabetic foot management [6]. A narrative review conducted in 2022 highlights the potential of AI in analyzing data collected from various technologies to improve clinical outcomes. AI algorithms are capable of identifying patterns and risk factors from complex datasets, facilitating early diagnosis and personalized treatment strategies. These methodologies have shown promising results in automating and enhancing diagnostic accuracy, improving monitoring systems, and optimizing treatment plans. However, the review also notes that despite the technological advancements, there remains a significant underutilization of simple sensors capable of capturing quantitative measures. This limitation restricts the full potential of AI-based systems in practical applications. Incorporating robust, sensor-derived data could further enhance the effectiveness of AI solutions in diabetic foot care, supporting more comprehensive and real-time clinical decision-making [7].

This study focuses on the prediction of diabetic foot ulcers (DFUs) in the inpatient population using advanced machine learning techniques. It presents a neural network model trained on a dataset comprising major risk factors and clinical outcomes associated with DFU development. The research particularly emphasizes the application of the Extreme Learning Machine (ELM) method, which has shown potential in improving diagnostic accuracy. In addition to ELM, other machine learning algorithms such as K-Nearest Neighbors (KNN), Support Vector Machine (SVM) with a Gaussian kernel, and Artificial Neural Networks (ANN) were implemented and compared to evaluate their performance. The predictive model was developed based on six critical variables known to influence DFU onset. Among the tested algorithms, the ELM-based model demonstrated a prediction accuracy of 79.8%, indicating its effectiveness in identifying high-risk individuals. The findings support the integration of machine learning approaches in clinical settings to facilitate early detection and intervention. However, one of the key challenges highlighted is the computational cost associated with running these models, which may limit scalability and implementation in resource-constrained environments. Nonetheless, the study reinforces the potential of data-driven predictive systems in enhancing diabetic foot care and reducing the burden of complications through timely diagnosis [8].

Despite substantial progress in the application of IoT and machine learning for diabetic foot monitoring, existing solutions exhibit notable limitations. Many systems are hindered by high development costs, non-scalable hardware designs, and a lack of real-time analytics capabilities. Additionally, several models are trained on limited or homogeneous datasets, raising concerns about their generalizability across diverse patient populations. Current approaches often lack integration with intuitive user interfaces, impeding patient engagement and timely clinical intervention. Moreover, few studies provide seamless, end-to-end systems that incorporate sensor-based data acquisition, wireless transmission, intelligent risk analysis, and mobile-based visualization within a unified framework. These shortcomings underscore the need for a cost-effective, lightweight, and user-centric solution that supports continuous monitoring and accurate prediction of diabetic foot ulcer risk. This research addresses these gaps by presenting an integrated smart insole system that leverages embedded pressure sensors, cloud connectivity, and machine learning algorithms to deliver real-time ulcer risk assessment and facilitate early intervention

III. METHODOLOGIES

The proposed approach aims to establish an intelligent framework for the early detection and prevention of diabetic foot ulcers. It utilizes Flexi-Force sensors to continuously monitor plantar pressure distribution, capturing data that reflects stress points on the foot. This sensor data is transmitted to a cloud-based platform through Internet of Things (IoT) devices, ensuring seamless and real-time data accessibility. To analyze the collected information, machine learning models such as Random Forest and Support Vector Machines are employed, enabling accurate risk prediction of potential ulcer development. The processed outcomes are delivered to users through an intuitive mobile application, which offers immediate alerts and facilitates prompt medical response. This integrated solution enhances patient engagement and supports proactive clinical intervention, ultimately aiming to reduce complications and improve long-term diabetic foot management.

A. Hardware Setup

This component focuses on the hardware integration required to construct the smart shoe system. It includes embedding pressure sensors within the insole to capture real-time plantar pressure data during user movement. A microcontroller, such as an Arduino, is used to interface with the sensors, enabling data acquisition and preliminary signal processing. To support remote monitoring, a communication module typically Wi-Fi is incorporated to facilitate seamless data transmission to external platforms or cloud services. The design ensures that all components are compactly integrated without compromising the comfort or usability of the footwear, making it suitable for continuous wear and long-term health monitoring.

B. Data acquisition and processing

The data acquisition and processing phase centers on capturing foot pressure information from the integrated sensors within the smart shoe. This stage begins with the collection of raw sensor readings that reflect the dynamic pressure distribution across the sole of the foot. Once collected, the data undergoes preprocessing to filter out noise

Authorized licensed use limited to: Malta College of ArtsScience&Tech. Downloaded on November 24,2025 at 11:37:56 UTC from IEEE Xplore. Restrictions apply.

and enhance signal clarity. Advanced processing techniques are then applied to extract meaningful features, such as key pressure zones, temporal variations in gait, and shifting pressure trends during movement. These insights are crucial for identifying abnormal patterns that may indicate early signs of foot complications, enabling timely analysis and intervention

C. Communication and connectivity

The communication and connectivity module is responsible for creating a reliable link between the smart shoe system and external devices such as smartphones, tablets, or computers. Utilizing wireless technologies like Wi-Fi or Bluetooth, this module ensures seamless and continuous data transmission from the shoe's embedded sensors to a centralized platform. Real-time connectivity allows for immediate access to foot pressure data, supporting remote monitoring by healthcare professionals or caregivers. Additionally, the system can be integrated with broader health management platforms, enabling cross-device interaction and contributing to a more comprehensive view of the user's overall health. This connectivity enhances the system's usability and effectiveness in delivering timely alerts and medical insights.

D. AI-Based Analysis

The AI-based analysis module involves the development and deployment of machine learning algorithms to interpret the foot pressure data collected by the smart shoe system. These algorithms are trained to recognize patterns that may signal the onset of diabetic foot ulcers or related abnormalities. Techniques such as Random Forest and Support Vector Classifiers are employed to classify pressure distribution trends and detect anomalies that deviate from normal gait or pressure behavior [11]. By leveraging historical data and real-time inputs, the system can make predictive assessments about potential risk areas. This intelligent analysis supports early diagnosis, enhances clinical decision-making, and enables timely intervention to prevent complications.

E. User Interface, Testing and Deployment

The user interface development module is dedicated to designing accessible and engaging platforms that facilitate interaction between the smart shoe system and its users. These interfaces, which may include mobile or web applications, are developed to present real-time foot pressure data in a clear and interpretable format. They provide visualizations, alerts for abnormal pressure patterns, and personalized insights to support both patients in managing their condition and healthcare professionals in making informed decisions. The goal is to ensure ease of use, encourage consistent monitoring, and enhance user engagement with the system.

The testing and validation module involves systematically evaluating the smart shoe system to confirm its accuracy, durability, and practical utility. This phase includes both controlled laboratory simulations and real-world trials involving diabetic patients. The system is assessed under various conditions to ensure consistent performance, reliability of data transmission, and correctness of AI-driven analysis [12]. Feedback from these evaluations is critical for refining the system prior to full-scale deployment.

The deployment and maintenance module addresses the implementation of the smart shoe system in real-world environments such as hospitals, diabetic clinics, and rehabilitation centers. This includes setting up the hardware and software infrastructure required for effective use in clinical workflows [13]. Continuous maintenance and technical support are provided to ensure long-term functionality, along with periodic updates to incorporate user feedback, resolve emerging issues, and integrate advancements in sensor and AI technologies.

IV. PROPOSED WORK

The architectural design process plays a pivotal role in establishing a robust and efficient system framework. It involves identifying the key components of the system and defining the communication protocols that enable interaction between them. This ensures seamless integration and coordination across all modules, resulting in a coherent and optimized system. The initial stage of this process, known as construction modelling, is dedicated to pinpointing the essential subsystems and outlining a structured methodology for controlling them and facilitating data flow. The result of this phase is a clearly articulated architectural model that acts as a blueprint for system development and deployment. The proposed system architecture presents a detailed view of its structural layout, illustrating how individual modules—such as sensing, data processing, communication, and user interaction—collaborate to achieve the desired functionality. This design approach not only boosts system performance but also promotes scalability, reliability, and ease of future upgrades and maintenance.

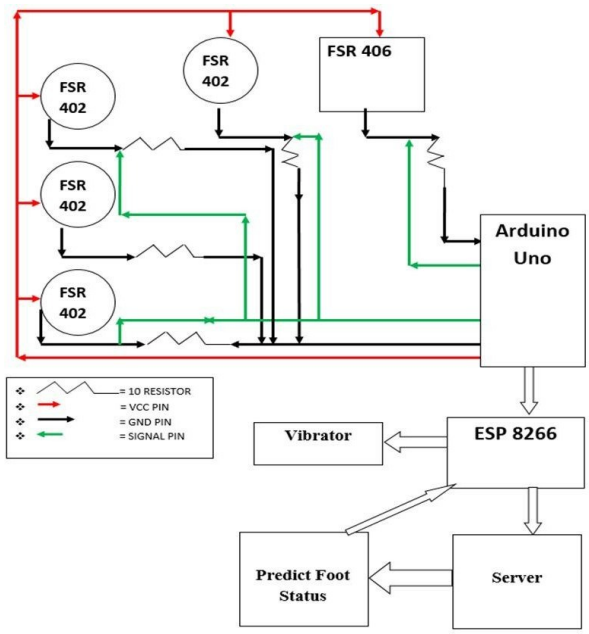

Fig.1.SystemArchitecture

Figure 1 depicts an integrated architecture that combines sensor technology, IoT connectivity, artificial intelligence, and a mobile application to enable real-time monitoring of diabetic foot ulcer risk. The core objective of this system is to identify diabetic individuals who are at an early risk of developing foot ulcers. The hardware configuration includes continuous foot pressure monitoring using Flexi Force Sensors or Force Resistive Sensors (FRS), which are

Authorized licensed use limited to: Malta College of ArtsScience&Tech. Downloaded on November 24,2025 at 11:37:56 UTC from IEEE Xplore. Restrictions apply.

embedded within a specially designed insole placed inside a wearable sock. These sensors are strategically installed at five to six critical pressure points on the foot to ensure comprehensive data collection. The system's circuit is engineered for precision in capturing foot pressure, with the sensors connected to an Arduino Uno microcontroller via jumper wires. The pressure data collected is transmitted to a personal computer through a USB interface and is processed using the Arduino Integrated Development Environment (IDE). This setup facilitates accurate data acquisition and prepares the information for further analysis through machine learning models aimed at early ulcer detection.

The mobile application component of the system securely stores collected foot pressure data in the cloud using the ESP-01 ESP8266 Serial Wi-Fi Wireless Transceiver Module. Through the integration of Firebase, the application ensures seamless real-time data transmission, storage, and analytics, providing patients with immediate access to their screening results directly on their mobile devices. Once the foot pressure values are recorded and analyzed, the processed results are instantly displayed within the app interface. This real-time feedback mechanism enables patients to monitor their foot health continuously and take immediate medical action if necessary, thereby enhancing early detection and management of diabetic foot ulcers.

To support intelligent analysis, the K-Nearest Neighbors (KNN) algorithm is utilized for classifying data related to potential ulcer formation. As a lazy learning algorithm, KNN does not require an explicit training phase but instead classifies new inputs based on their similarity to previously stored data points. By employing distance metrics such as Euclidean distance, the algorithm identifies the K closest data entries and determines the output class based on a majority vote among these neighbors. This method facilitates adaptive and efficient pattern recognition, making it well-suited for the dynamic and individualized nature of diabetic foot ulcer detection.

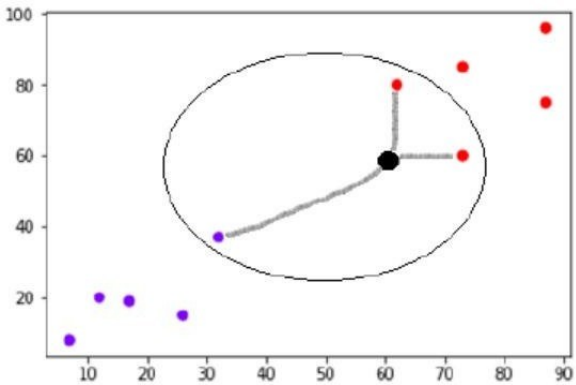

Fig.2.KNN Model [17]

Figure 2, the K-Nearest Neighbors (KNN) algorithm is employed to analyze foot pressure data collected by sensors embedded in the smart insole. By comparing real-time pressure patterns with historical datasets, KNN helps in identifying abnormal pressure zones that could signal early stages of ulcer development. Its straightforward classification approach, combined with its effectiveness on smaller datasets and adaptability across varying feature spaces, makes it a practical choice for recognizing early warning signs of diabetic foot ulcers and facilitating timely intervention.

Complementing this, the Random Forest algorithm serves as a robust ensemble learning method for predicting ulcer risk based on foot pressure data. By generating multiple decision trees from random subsets of the training data and using majority voting to make final classifications, Random Forest enhances predictive accuracy and minimizes overfitting. It effectively classifies high-risk pressure points, enabling the detection of potential ulcers with greater reliability. Furthermore, it can handle fluctuations in sensor data and evaluate performance through metrics like precision, recall, and accuracy. This allows for consistent and reliable identification of risk patterns. The proposed system architecture integrates hardware, software, and intelligent analysis tools to provide a comprehensive solution for diabetic foot ulcer detection. The hardware component comprises Flexi Force sensors strategically embedded within the insole to track foot pressure continuously. These readings are processed by an Arduino microcontroller and transmitted wirelessly to a cloud database via the ESP8266 Wi-Fi module. The software layer utilizes machine learning algorithms such as KNN and Random Forest to analyze the data and identify potential risks. Insights are delivered through a mobile application, enabling patients and healthcare professionals to receive real-time alerts, track foot health, and take preventive actions promptly. This integrated system promotes proactive care, early diagnosis, and reduced ulcer-related complications.

V. RESULTS

Figure 3 displays the prototype of the proposed intelligent system for early detection of diabetic foot ulcers. The hardware configuration includes Flexi Force sensors embedded strategically within the insole of a slipper, targeting high-risk areas such as the heel, midfoot, and toes. These sensors are connected to an Arduino microcontroller, which processes real-time pressure data. The sensor signals are routed via conductive wiring to the microcontroller, and subsequently integrated with an IoT module that facilitates wireless data transmission and cloud-based storage. This setup supports continuous tracking of foot pressure anomalies, enabling early-stage detection of ulcer formation.

Fig.3. Prototype:Smart diabetic foot ulcer detection system

Authorized licensed use limited to: Malta College of ArtsScience&Tech. Downloaded on November 24,2025 at 11:37:56 UTC from IEEE Xplore. Restrictions apply.

Figure 4 illustrates a pressure distribution map of the foot, generated as part of the diabetic foot ulcer detection system. The visualization is based on data collected from Flexi Force sensors strategically positioned within the insole at critical pressure points. Different color regions in the image reflect varying levels of pressure: red areas indicate high-pressure zones that are more susceptible to ulcer formation due to sustained stress; yellow regions represent moderate pressure, signaling the need for ongoing observation; and green zones denote low-pressure areas, implying minimal risk. This color-coded representation enables precise identification of abnormal pressure points on the foot, supporting timely medical intervention. The gathered pressure data is further processed using machine learning algorithms and displayed via an intuitive user interface, facilitating real-time assessment and monitoring for both patients and healthcare professionals.

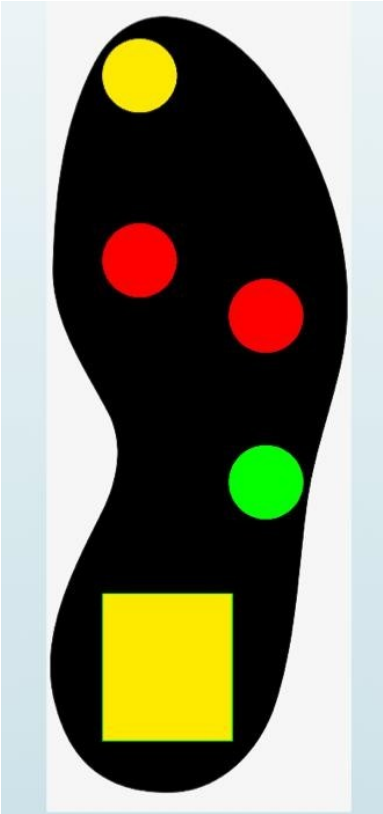

Fig.4. App interface for user interaction

The model's classification capabilities are given in figure 5, illustrates a confusion matrix and several performance metrics. The classifier achieves near-perfect performance, with a training accuracy of 1.0 and a test accuracy of 0.99996, indicating excellent generalization and minimal risk of overfitting. The confusion matrix illustrates that Class 0 had 148 accurate predictions and just one misclassification; Class 1 recorded 2,895 correct predictions with zero errors; and Class 2 yielded 26,957 accurate classifications without misclassification. These results reflect the model's strong precision and robustness in class identification.

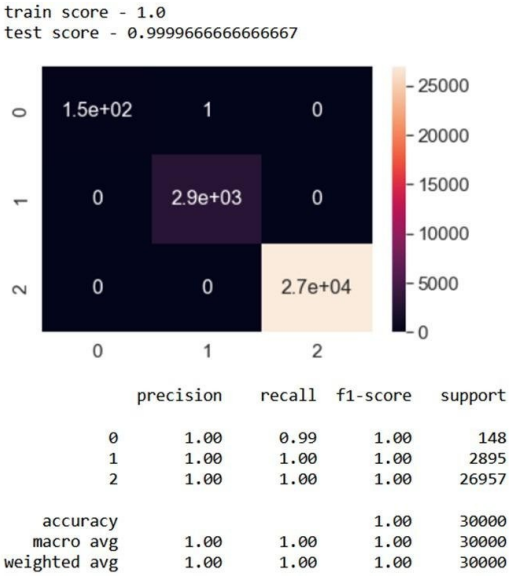

Fig.5. App interface for user interaction

The accompanying performance table further validates these outcomes, with Precision, Recall, and F1-Scores all nearing or reaching 1.00. Class 0's recall is slightly lower at 0.99, but overall model performance remains highly impressive. The macro and weighted averages across all metrics stand at or near 1.00, underscoring the balanced and consistent behavior of the classifier, which is crucial for real-world deployment where reliability is essential.

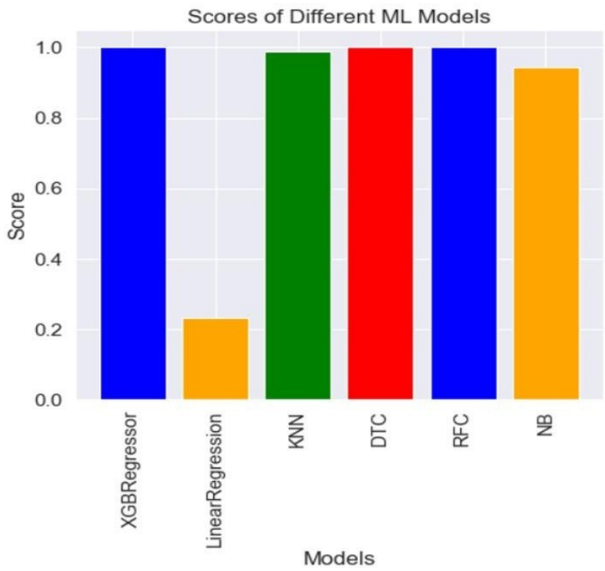

Fig.6. Different Machine Learning Models

Additionally, figure 6 illustrates a comparative bar chart showcases the effectiveness of different machine learning models applied to the classification task. Models such as XGBoost Regressor, Decision Tree Classifier, and Random Forest Classifier achieved top scores of 1.0, demonstrating exceptional performance. K-Nearest Neighbors (KNN) also performed admirably, closely trailing the ensemble methods. In contrast, Naive Bayes and Linear Regression lagged behind, with Linear Regression showing significantly lower accuracy suggesting that the data exhibits complex, non-linear characteristics best captured by tree-based or ensemble models. These findings highlight the critical role of algorithm selection in achieving optimal predictive performance for diabetic foot ulcer detection.

Authorized licensed use limited to: Malta College of ArtsScience&Tech. Downloaded on November 24,2025 at 11:37:56 UTC from IEEE Xplore. Restrictions apply.

TABLE I
COMPARISON OF ML MODELS FOR DFU PREDICTION

Machine Learning Model	Accuracy	Precision	Recall	F1-Score
Random Forest Classifier	1	1	1	1
K-Nearest Neighbors (KNN)	~0.999	~0.999	~0.999	~0.999
XGBoost Regressor	1	1	1	1
Decision Tree Classifier	1	1	1	1
Linear Regression	<0.60	<0.60	<0.60	<0.60
Naive Bayes	~0.75	~0.75	~0.75	~0.75

Table 1 presents a comparative analysis of various machine learning models employed for diabetic foot ulcer prediction based on performance metrics such as accuracy, precision, recall, and F1-score. The Random Forest Classifier, K-Nearest Neighbors (KNN), XGBoost Regressor, and Decision Tree Classifier each achieved near-perfect scores across all metrics, indicating their strong suitability for this classification task. Among them, Random Forest stood out for its robustness and ability to manage data variability effectively. KNN also demonstrated high accuracy and was particularly efficient for smaller datasets due to its simplicity and adaptability. In contrast, models like Linear Regression and Naive Bayes underperformed, with significantly lower scores, highlighting their limitations in capturing the complex, non-linear patterns present in the sensor data. These results emphasize the importance of algorithm selection in achieving reliable and accurate early detection of diabetic foot ulcers.

VI. CONCLUSION

This study presents the design and development of a real-time, IoT-enabled smart insole system integrated with machine learning algorithms for the early detection and prevention of diabetic foot ulcers (DFUs). The system demonstrated exceptional classification performance, achieving nearly perfect scores in accuracy, precision, recall, and F1-measure across multiple machine learning models, particularly Random Forest and K-Nearest Neighbors. While the results are highly promising, certain limitations must be acknowledged. The current system has been tested on a controlled dataset, and its performance in diverse, real-world clinical environments with heterogeneous patient profiles remains to be validated. Sensor calibration, device durability, user compliance, and data privacy are other key challenges that need to be addressed for large-scale deployment. Furthermore, computational requirements for real-time analytics may pose barriers in low-resource settings, necessitating optimization strategies like model pruning or edge computing. Despite these challenges, the proposed approach opens several avenues for future research. Opportunities include expanding the dataset to incorporate varying ulcer stages and patient demographics, integrating additional physiological sensors (e.g., temperature, humidity), and enhancing interpretability of AI decisions for clinical acceptance. Additionally, deployment in hospital and remote care settings could offer valuable insights for practical refinement. The fusion of wearable technology, IoT, and AI in this work underscores the transformative potential of smart healthcare systems in improving diabetic foot care, enabling timely intervention, and ultimately reducing the risk of complications and amputations in diabetic patients.

REFERENCES

[1] S. Dhivya, A. N. Nithya, R. Premkumar, and M. Vennila, “A Real-Time Foot Pressure Measurement for Early Detection of Ulcer Formation in Diabetic Patients Using LabVIEW,” International Conference on Design and Manufacturing, pp. 1302–1309, 2013.

[2] M. E. Fernando, R. G. Crowther, E. Pappas, P. A. Lazzarini, M. Cunningham, K. S. Sangla, P. Buttner, and J. Golledge, “Plantar pressure in diabetic peripheral neuropathy patients with active foot ulceration, previous ulceration, and no history of ulceration: A meta-analysis of observational studies,” PLoS One, 2014.

[3] N. Wang and G. Kang, “A Monitoring System for Type 2 Diabetic Mellitus,” 14th IEEE International Conference on e-Health Networking, 2012.

[4] U. M. Chaska, M. A. Thatte, and S. L. Patil, “Development of Plantar Foot Pressure Distribution System Using Flexi Force Sensors,” Sensors & Transducers Journal, vol. 108, no. 9, pp. 73–79, Sept. 2009.

[5] S. Krishna Priya, A. N. Nithyaa, and R. Premkumar, “Screening of Foot Ulceration in Diabetic Neuropathy Patients Using Flexi Force Sensor Platform,” International Journal of Scientific Engineering Research, vol. 5, no. 4, pp. 87–91, Apr. 2014.

[6] S. Saranya, N. Banupriya, S. Sivaharini, E. Suvalakshmi, and B. Suganthi, “Early Detection of Chronicity Foot Lesion in Diabetic Neuropathy Patients,” International Conference on Frontiers in Materials and Smart System Technologies, 2019.

[7] S. L. Patil, M. A. Thatte, and U. M. Chaskar, “Development of Plantar Foot Pressure Distribution System Using Flexi Force Sensors,” Sensors & Transducers Journal, vol. 108, no. 9, pp. 73–79, Sept. 2009.

[8] M. P. Englund and G. Patching, “An Inexpensive and Accurate Method of Measuring the Force of Response in Reaction Time Research,” Behavior Research Methods, 2009.

[9] A. Merolli and L. Uccioli, “Plantar Pressure Distribution in Patients with Neuropathic Diabetic Foot,” Journal of Applied Biomaterials & Biomechanics, vol. 3, pp. 614–620, 2005.

[10] H. J. Popalwar, A. K. Gaur, B. D. Athani, and J. Ramesh, “Clinical Examination and Foot Pressure Analysis of Diabetic Foot: Prospective Analytical Study in Indian Diabetic Patients,” National Journal of Medical Research, ISSN 2249-4995, eISSN 2277-8810.

[11] Seekarajapuram Dinakaran, Nandakumar, Lakshmanan Muthusamy, and Divya Sundar Vellore Sundaresan. "Implementation of Energy‐Aware Optimal Routing for Improving Traffic Capacity in Ad Hoc Wireless Network Using Hybrid Heuristic Algorithm." International Journal of Communication Systems 38, no. 4 (2025): e6126.

[12] Lakshmanan, M., and GS Anandha Mala. "Emotional Analysis Through Deep Learning Models." In 2022 Third International Conference on Smart Technologies in Computing, Electrical and Electronics (ICSTCEE), pp. 1-5. IEEE, 2022.

[13] Lakshmanan, M., GS Anandha Mala, and K. M. Anandkumar. "Highly secured EHR management system based on blockchain technology with digitally signed authentication using data sanitization and polynomial interpolation." Biomedical Signal Processing and Control 87 (2024): 105412.

[14] Weatherall, Teagan, Pinar Avsar, Linda Nugent, Zena Moore, John H. McDermott, Seamus Sreenan, Hannah Wilson et al. "The impact of machine learning on the prediction of diabetic foot ulcers–a systematic review." Journal of Tissue Viability (2024).

[15] Yap, Moi Hoon, Bill Cassidy, Michal Byra, Ting-yu Liao, Huahui Yi, Adrian Galdran, Yung-Han Chen et al. "Diabetic foot ulcers segmentation challenge report: benchmark and analysis." Medical Image Analysis 94 (2024): 103153.

[16] Da Ros, Roberto, Roberta Assaloni, Andrea Michelli, Barbara Brunato, Enrica Barro, Marco Meloni, and Cesare Miranda. "Burden of infected diabetic foot ulcers on hospital admissions and costs in a third-level center." Diabetology 5, no. 2 (2024): 141-150.

[17] https://www.tutorialspoint.com/machine_learning/machine_learning_knn_nearest_neighbors.htm

Authorized licensed use limited to: Malta College of ArtsScience&Tech. Downloaded on November 24,2025 at 11:37:56 UTC from IEEE Xplore. Restrictions apply.